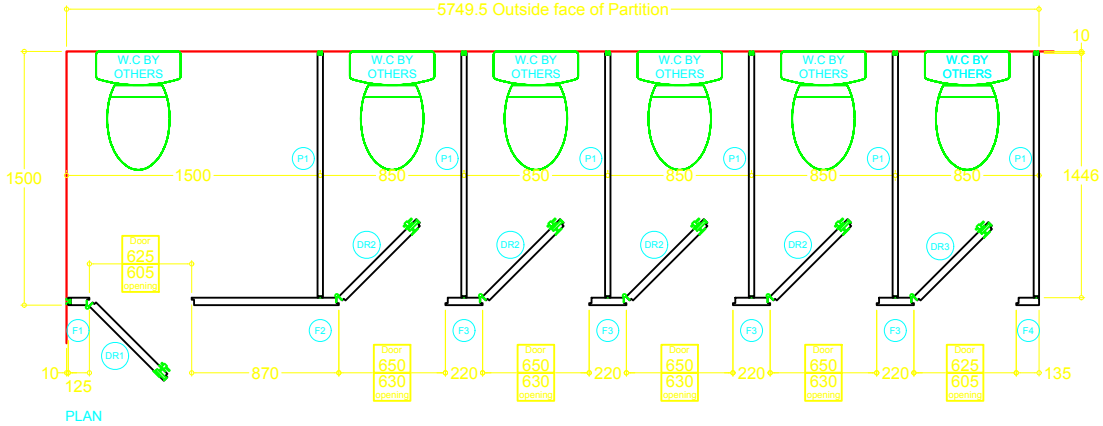


PLAN

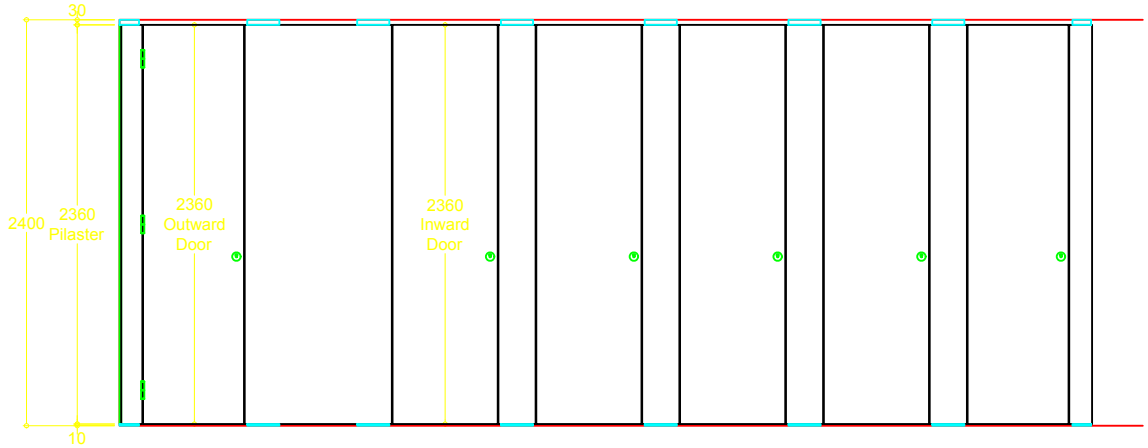


SYLAN CUBICLE ELEVATION

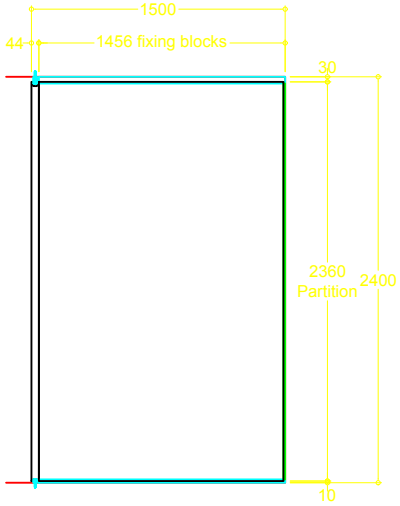


SYLAN CUBICLE SECTION

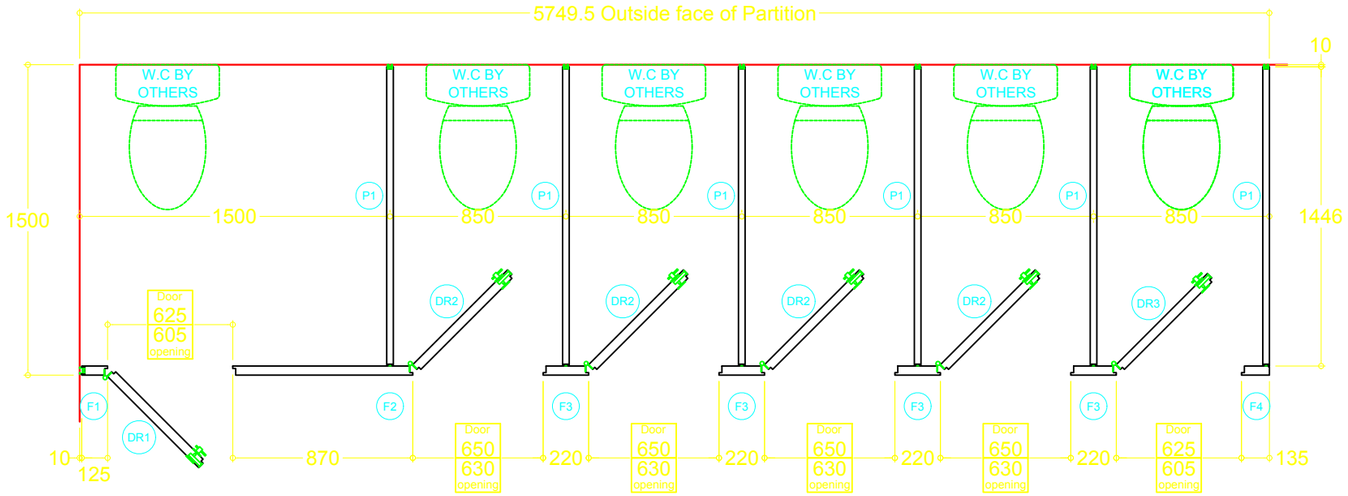


PLAN

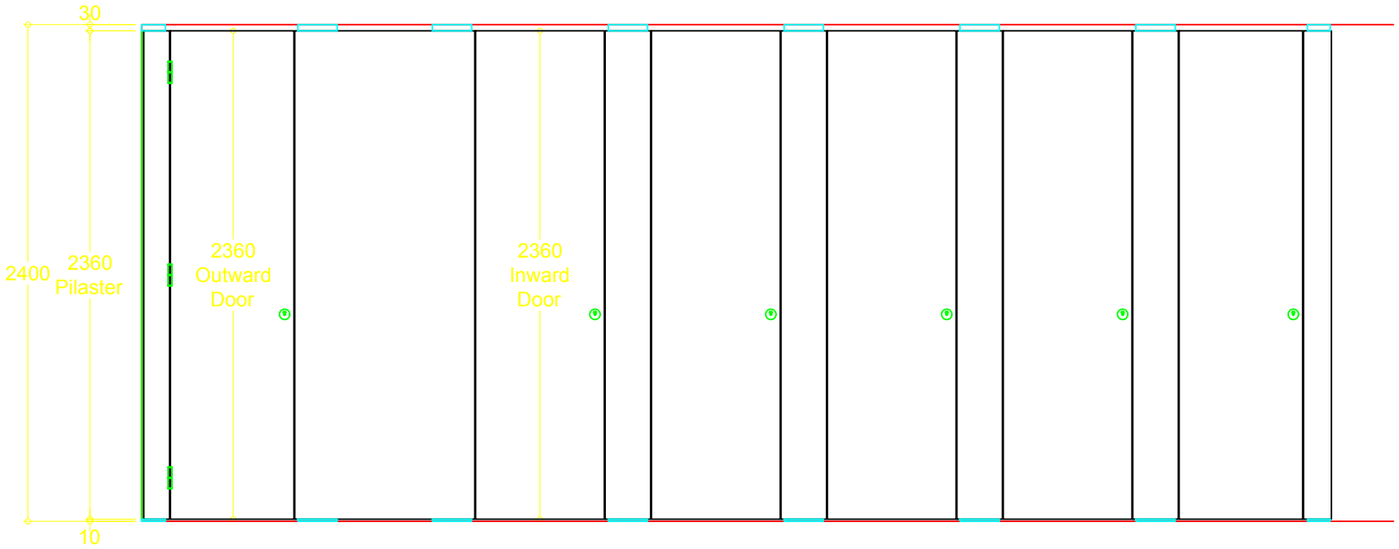


SYLAN CUBICLE ELEVATION

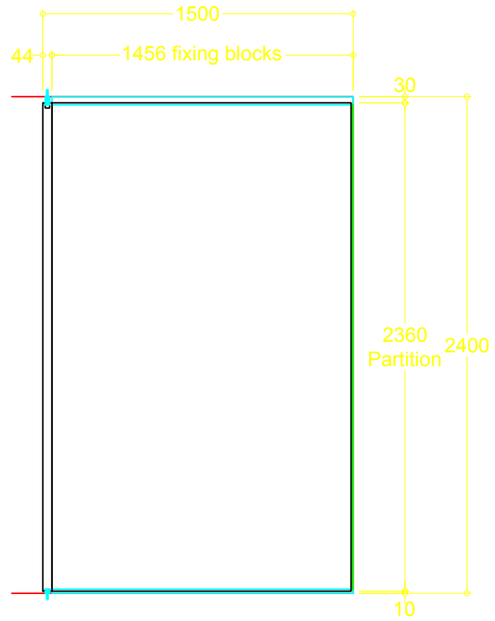


SYLAN CUBICLE SECTION